KT-SLFLED500HV-S1-XX-YM-750-VDIM

SPORTS LIGHT FLOOD

DESCRIPTION

500W Sports Light Flood | 5000K | Multiple Beam Angle Options | 208–480V Input | Gray Housing

APPLICATION

High power, wide flood, pole mount illumination needs (municipal parks and baseball fields, high school football stadiums, driving ranges, rodeos, ski resorts, etc.)

PRODUCT FEATURES

- Heavy duty die cast aluminum housing in gray finish offers a durable and modern aesthetic while carrying inspiration from existing legacy fixture solutions. Optimized for HID replacement needs
- Precision crafted optics that ensure uniform, proper lighting. Available in multiple beam angle options (30° standard, 20°, 40°, 60°, and 80° optional)
- Glare shield included in packaging. Easy install for use as required by site demands
- Comes with shorting cap and integrated NEMA/ANSI C136.41 7 pin twist lock receptacle
- Designed for install as a single assembly or with remote driver box. Allows for on site flexibility and lower EPA ratings
- Pre installed yoke mount bracket. Slipfitter and knuckle mounts optional (sold separately)
- Fixture mountable laser accessory available for fixture aiming, KT-SLFLED-LASER-G (sold separately)
- Ambient operating temperature: −40°C/−40°F to 50°C/122°F
- Powered by Keystone 0–10V dimming LED driver with built-in 20kV line-to-ground surge protection
- UL Certified for wet locations; IP65 rated
- Power factor: > 0.95
- THD: < 20%
- LED chip lifetime: L70 > 100,000 hrs @ 25°C/77°F ambient fixture temperature
- Meets FCC Part 15, Part B, Class A standards for conducted and radiated emissions

DIMENSIONS AND WEIGHTS

Carton Dimensions	20.08"L × 21.65"W × 20.08"H
Carton Weight	41.01 lbs
Total Fixture Weight	38.58 lbs
Fixture Head Weight	26.54 lbs
Fixture Driver Box Weight	12.04 lbs

PRODUCT SPECIFICATIONS

Catalog Number	Wattage	CCT	Lumens	Efficacy	Input Voltage	Dimming	Beam Angle	CRI	DLC	Legacy Equivalent
KT-SLFLED500HV-S1-20-YM-750-VDIM	500W	5000K	70,000	140 lm/W	208–480V	0–10V	20°	> 70	Y	1,500W MH
KT-SLFLED500HV-S1-30-YM-750-VDIM							30°			
KT-SLFLED500HV-S1-40-YM-750-VDIM							40°			
KT-SLFLED500HV-S1-60-YM-750-VDIM							60°			
KT-SLFLED500HV-S1-80-YM-750-VDIM							80°			

Note: Fixtures with 20°, 40°, 60°, and 80° beam angles are available and assembled to order. Lead times may apply.

KT-SLFLED500HV-S1-XX-YM-750-VDIM

SPORTS LIGHT FLOOD

PHYSICAL SPECIFICATIONS

WITH DRIVER BOX ATTACHED

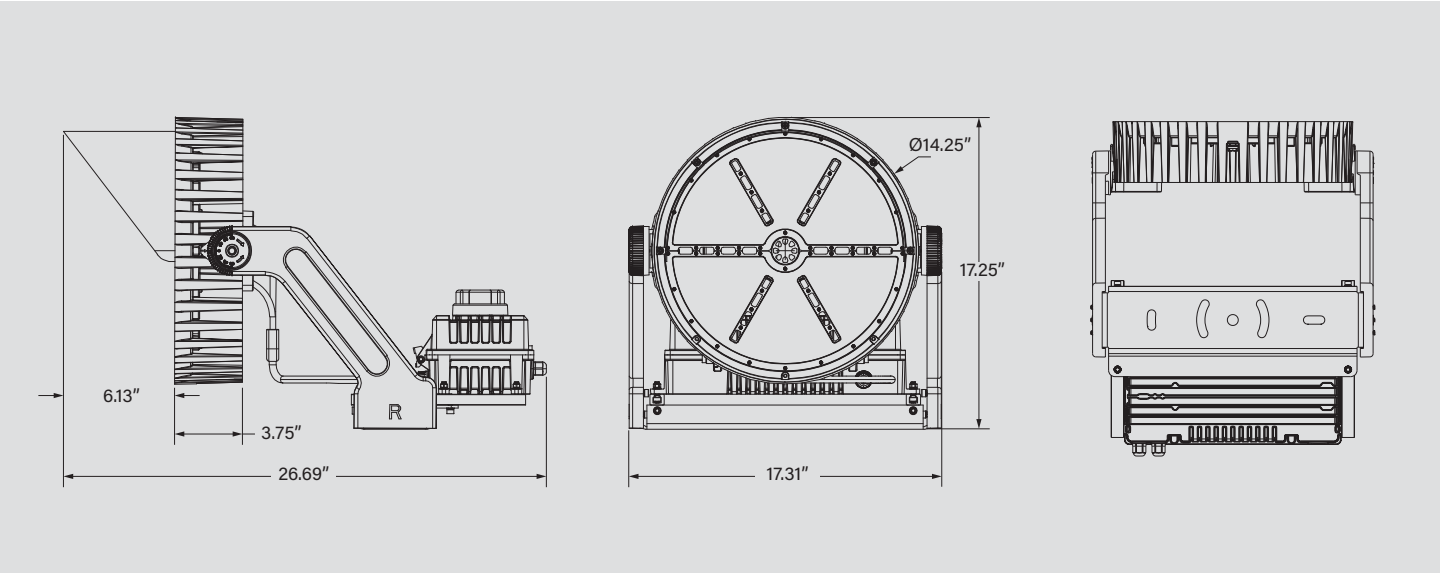

CROSSARM

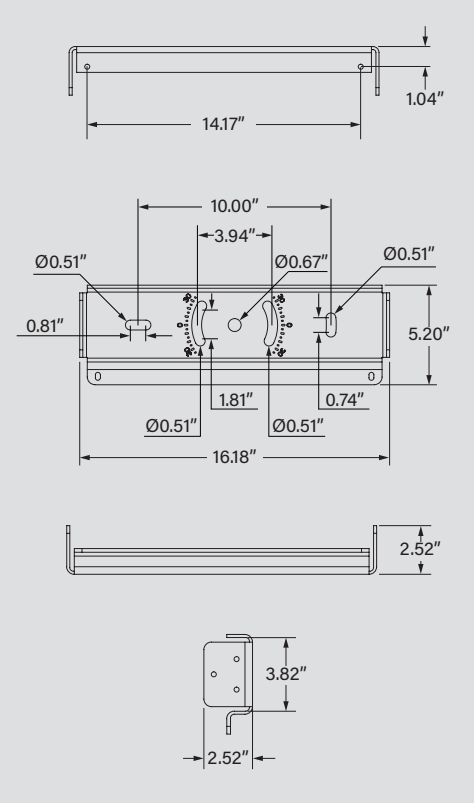

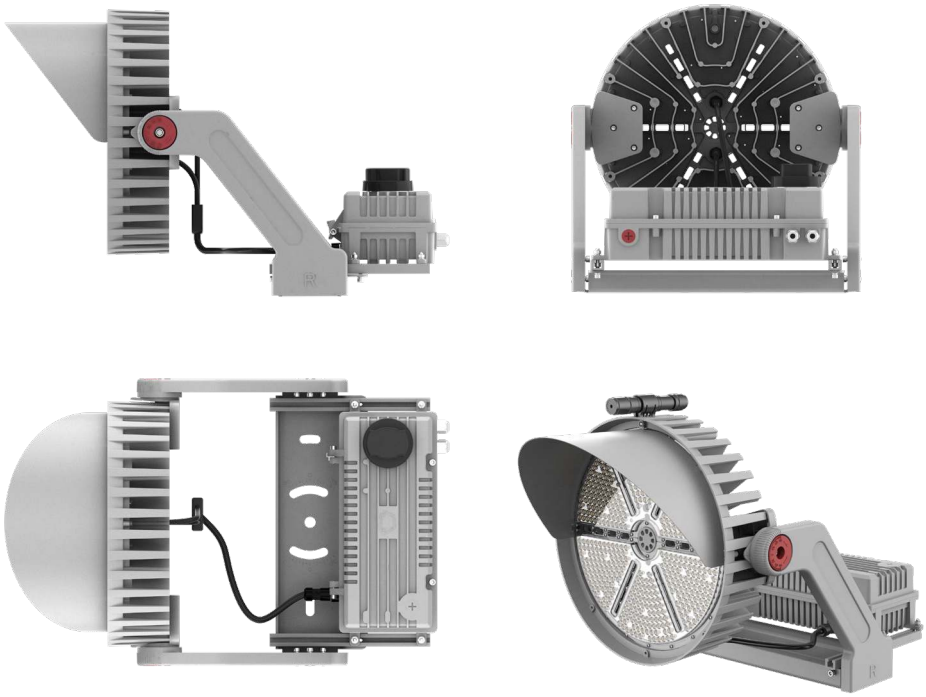

KT-SLFLED500HV-S1-XX-YM-750-VDIM

SPORTS LIGHT FLOOD

PHYSICAL SPECIFICATIONS

WITH DRIVER BOX SEPARATED

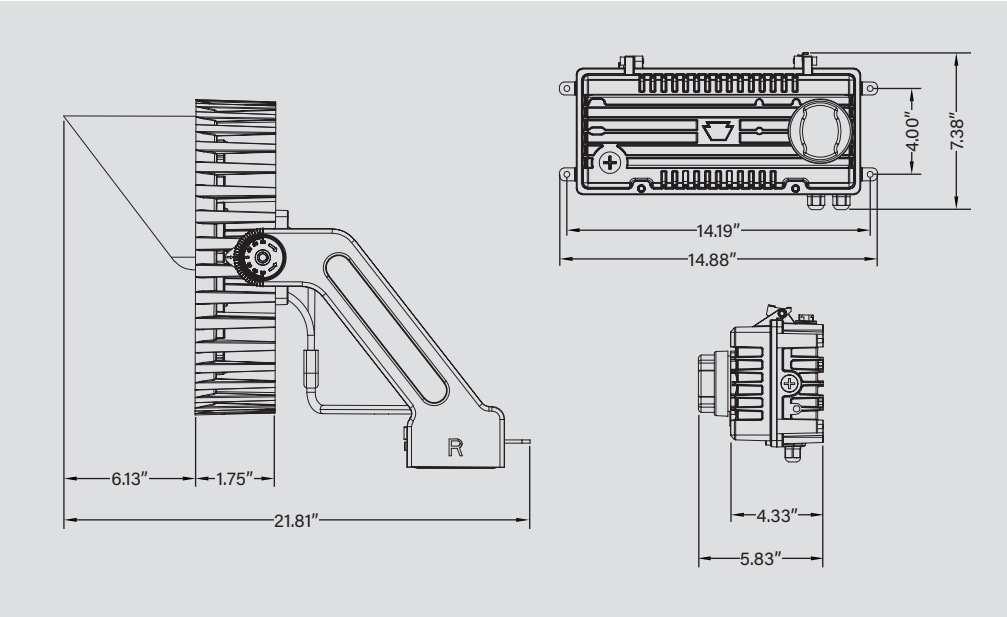

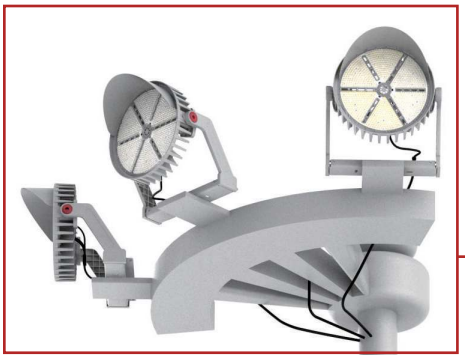

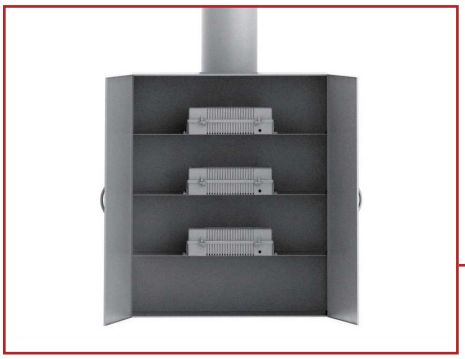

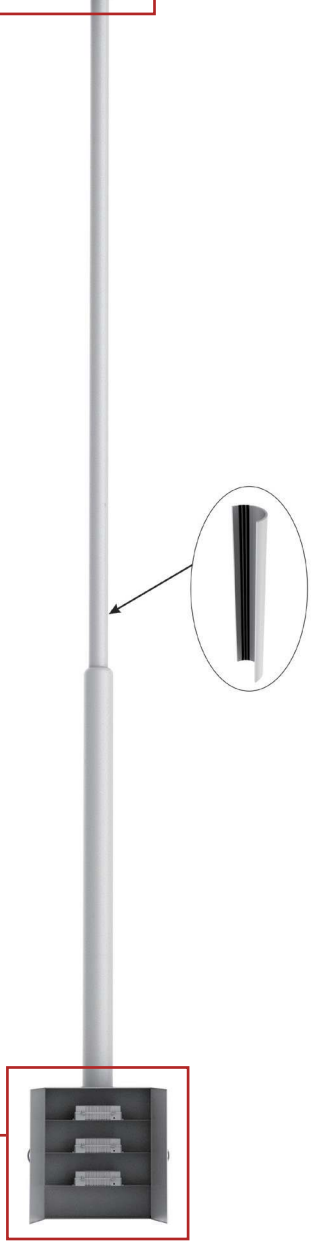

Note: Maximum cord length is 50 m / 164 ft
Note: Images are for reference only. Contact Keystone with questions regarding remote mounting and enclosures

KT-SLFLED500HV-S1-XX-YM-750-VDIM

SPORTS LIGHT FLOOD

WITH DRIVER BOX SEPARATED

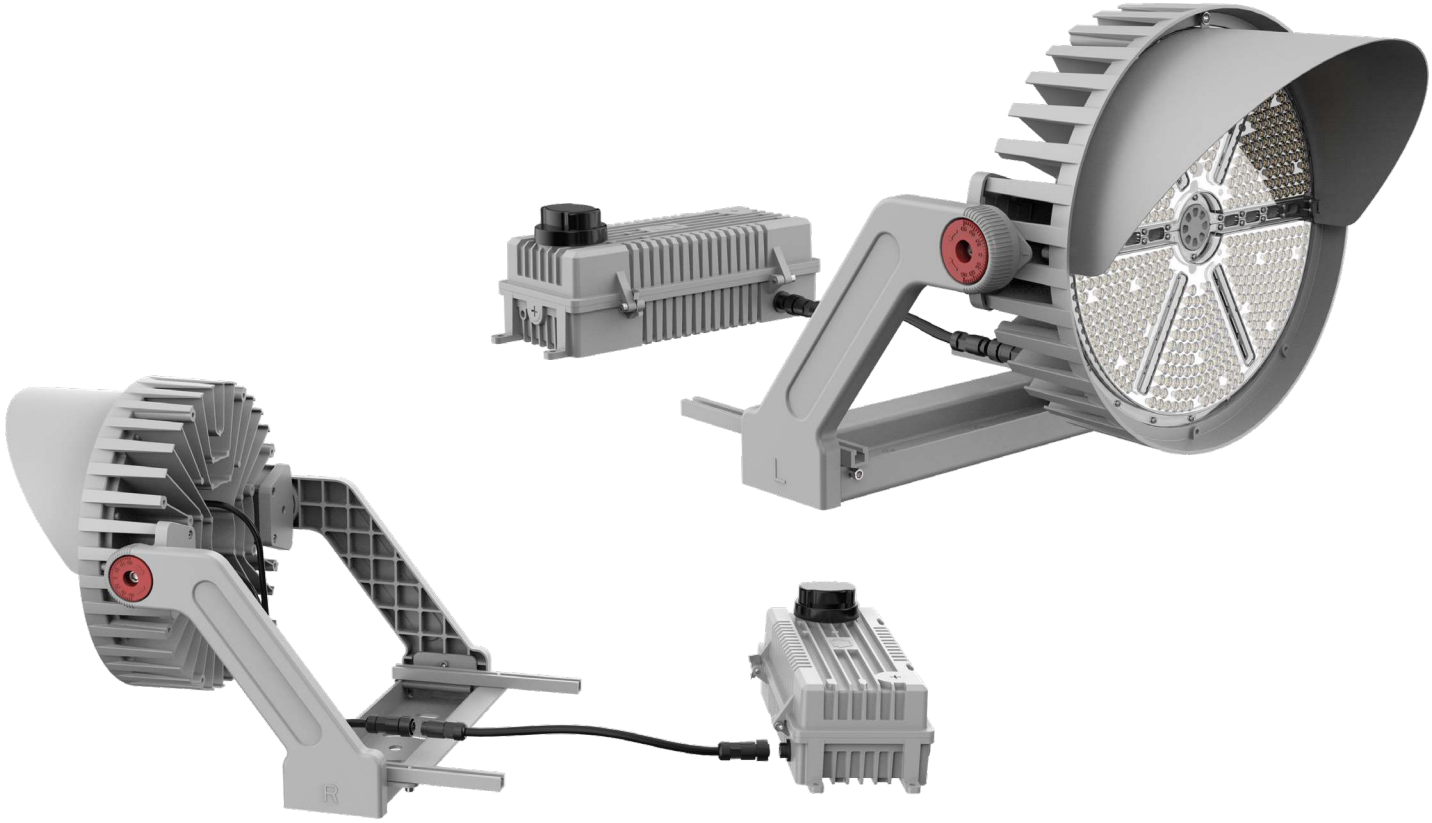

WIRING DIAGRAM

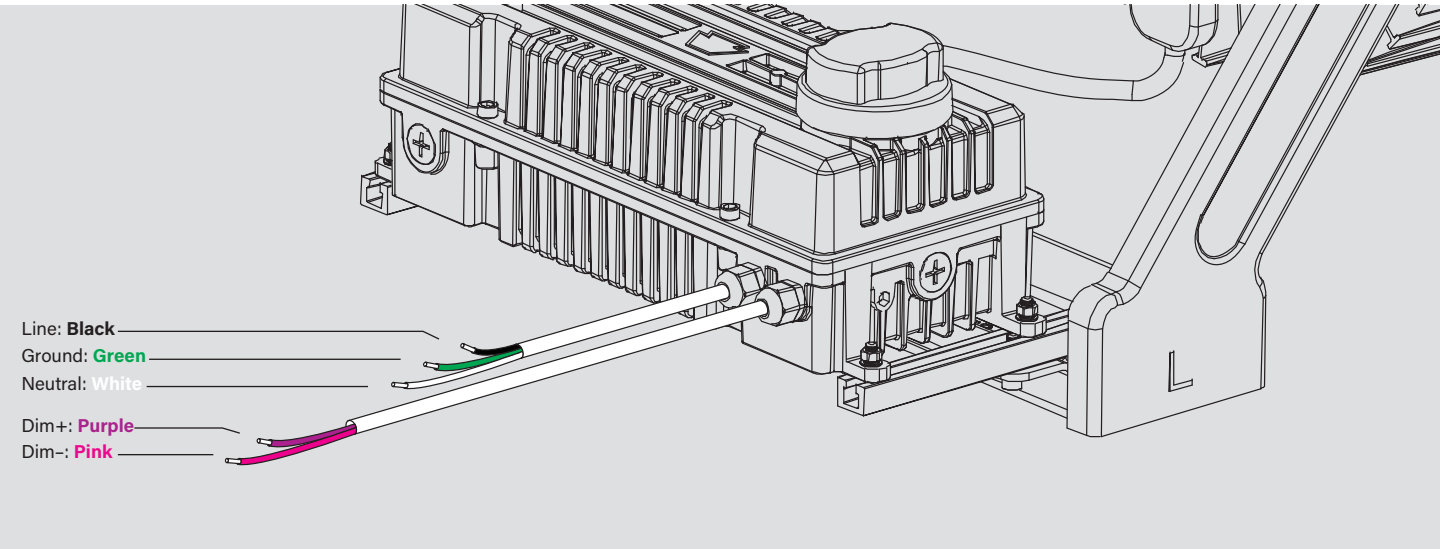

Note: 16 AWG cord. Input and dimming wires extend 3 ft from driver box.

KT-SLFLED500HV-S1-XX-YM-750-VDIM

SPORTS LIGHT FLOOD

LIGHT DISTRIBUTION PATTERN

Photometric layouts for general reference only. All fixtures are pointed at 45° below horizontal. Each square is 10 ft x 10 ft

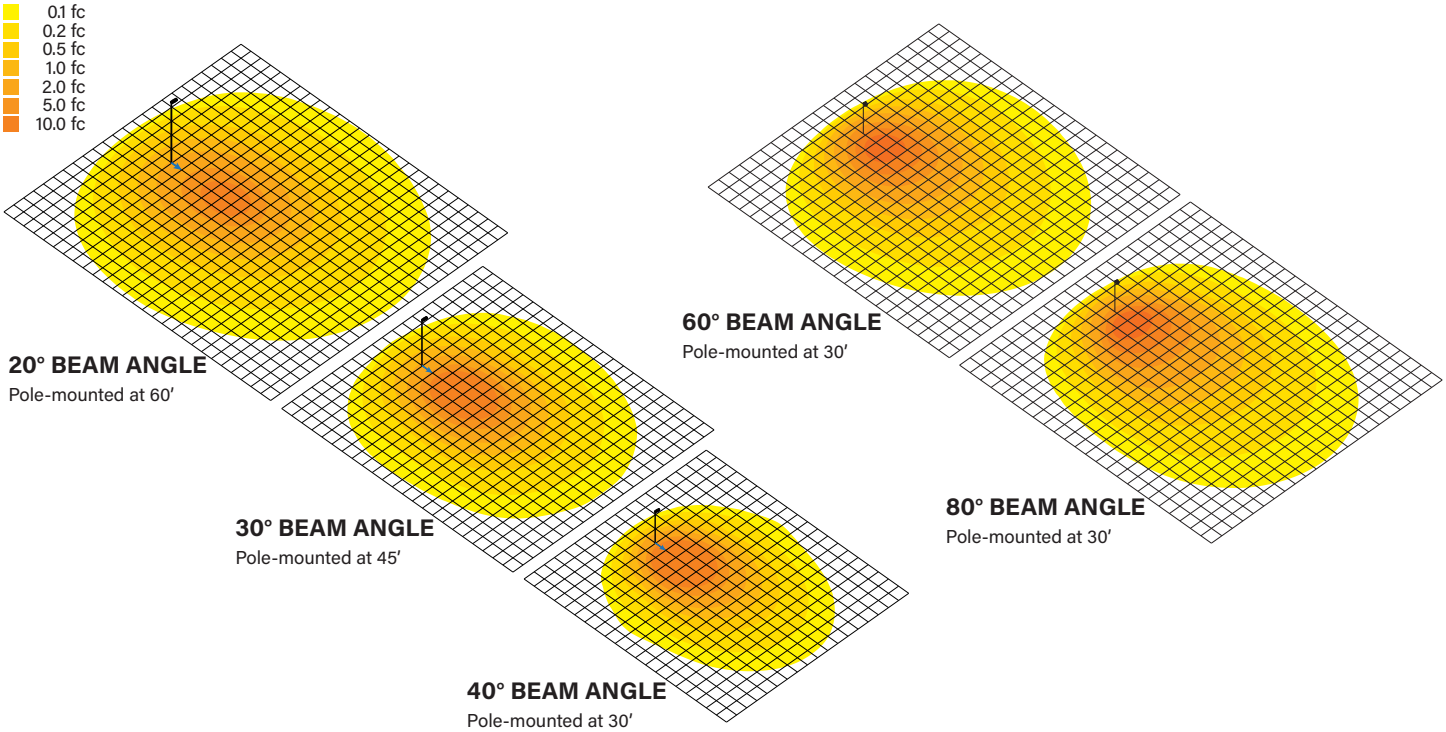

PHOTOMETRIC SPECIFICATIONS (20° BEAM ANGLE)

ISOCANDELA PLOT

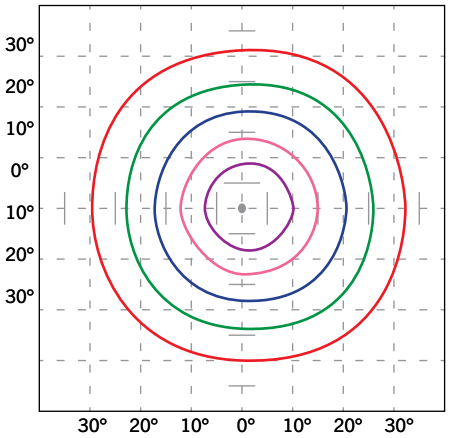

cd: **17663** (10%)
cd: **28261** (16%)
cd: **44157** (25%)
cd: **70652** (40%)
cd: **111277** (63%)
Imax cd: **176630** (100%)

LUMINOUS INTENSITY DISTRIBUTION

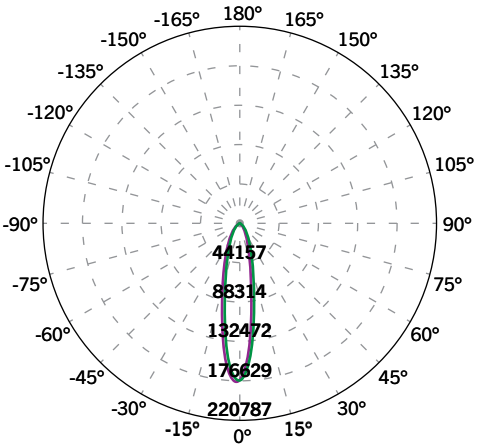

Average diffuse angle (50%) : **22°**
Unit: **cd**

1 Violet C0-C180
2 Green C90-C270

FLUX DISTRIBUTION

Zone	Lumens	% Luminaire
Forward Light	**32,620**	**48.4%**
0°-30°	20,733	30.8%
30°-60°	9,453	14.0%
60°-80°	2,282	3.4%
80°-90°	153	0.2%
Back Light	**33,733**	**50.1%**
0°-30°	21,422	31.8%
30°-60°	9,772	14.5%
60°-80°	2,372	3.5%
80°-90°	167	0.2%
Up Light	**1,025**	**1.5%**
90°-100°	87	0.1%
100°-180°	938	1.4%

(Photometric Specifications continued on next page)

KT-SLFLED500-S1-XX-YM-750-VDIM

SPORTS LIGHT FLOOD

PHOTOMETRIC SPECIFICATIONS (30° BEAM ANGLE)

ISOCANDELA PLOT

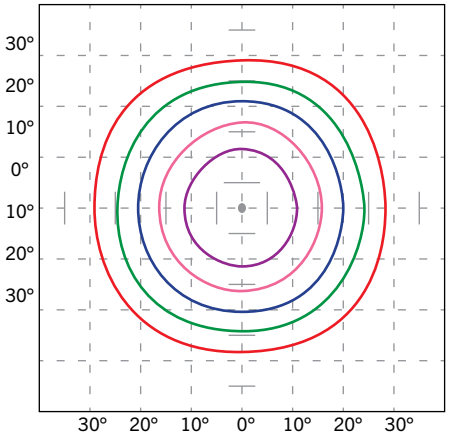

cd: **19847** (10%) cd: **79390** (40%)
cd: **31756** (16%) cd: **125039** (63%)
cd: **49618** (25%) Imax cd: **199474** (100%)

LUMINOUS INTENSITY DISTRIBUTION

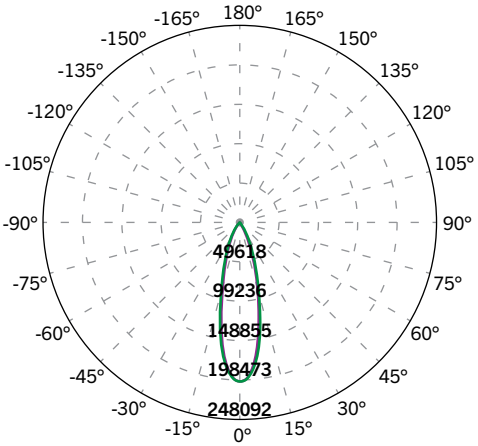

Average diffuse angle (50%) : **27.6°**
Unit: **cd**

1 Violet C0-C180
2 Green C90-C270

FLUX DISTRIBUTION

Zone	Lumens	% Luminaire
Forward Light	**35,119**	**49.9%**
0°-30°	26,988	38.3%
30°-60°	6,739	9.6%
60°-80°	1,322	1.9%
80°-90°	69	0.1%
Back Light	**35,326**	**50.1%**
0°-30°	27,175	38.6%
30°-60°	6,811	9.7%
60°-80°	1,280	1.8%
80°-90°	59	0.1%
Up Light	**0**	**0.0%**
90°-100°	0	0.0%
100°-180°	0	0.0%

PHOTOMETRIC SPECIFICATIONS (40° BEAM ANGLE)

ISOCANDELA PLOT

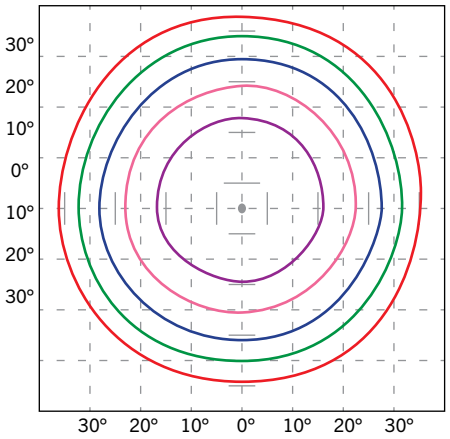

cd: **13573** (10%) cd: **54294** (40%)
cd: **21717** (16%) cd: **85513** (63%)
cd: **33934** (25%) Imax cd: **135734** (100%)

LUMINOUS INTENSITY DISTRIBUTION

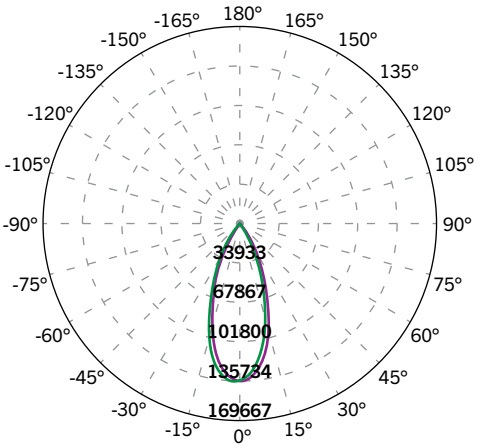

Average diffuse angle (50%) : **39.8°**
Unit: **cd**

1 Violet C0-C180
2 Green C90-C270

FLUX DISTRIBUTION

Zone	Lumens	% Luminaire
Forward Light	**34,979**	**45.9%**
0°-30°	26,903	35.3%
30°-60°	7,175	9.4%
60°-80°	834	1.1%
80°-90°	67	0.1%
Back Light	**40,085**	**52.6%**
0°-30°	30,557	40.1%
30°-60°	8,627	11.3%
60°-80°	830	1.1%
80°-90°	71	0.1%
Up Light	**1,078**	**1.4%**
90°-100°	79	0.1%
100°-180°	1,000	1.3%

KT-SLFLED500-S1-XX-YM-750-VDIM

SPORTS LIGHT FLOOD

PHOTOMETRIC SPECIFICATIONS (60° BEAM ANGLE)

ISOCANDELA PLOT

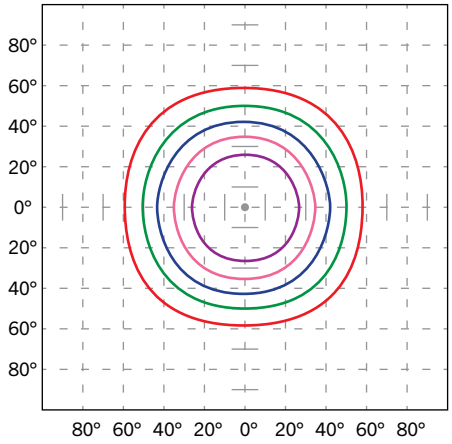

cd: **5278** (10%) cd: **21113** (40%)
cd: **8445** (16%) cd: **33253** (63%)
cd: **33934** (25%) Imax cd: **52783** (100%)

LUMINOUS INTENSITY DISTRIBUTION

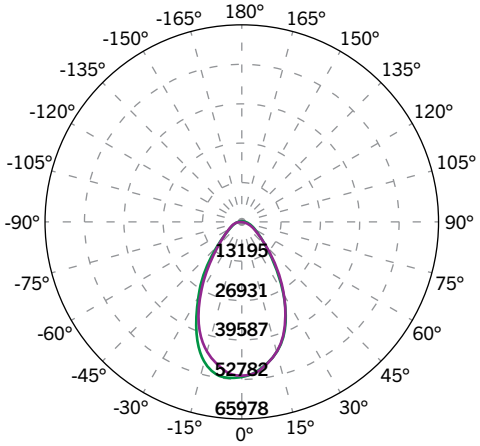

Unit: **cd**

1 Violet C0-C180
2 Green C90-C270

FLUX DISTRIBUTION

Zone	Lumens	% Luminaire
Forward Light	**33,656**	**50.2%**
0°-30°	16,911	25.2%
30°-60°	13,812	20.6%
60°-80°	2,758	4.1%
80°-90°	175	0.3%
Back Light	**33,329**	**49.8%**
0°-30°	16,831	25.1%
30°-60°	13,611	20.3%
60°-80°	2,723	4.1%
80°-90°	163	0.2%
Up Light	**0**	**0.0%**
90°-100°	0	0.0%
100°-180°	0	0.0%

PHOTOMETRIC SPECIFICATIONS (80° BEAM ANGLE)

ISOCANDELA PLOT

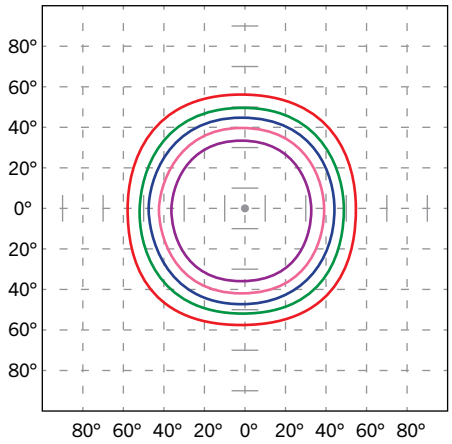

cd: **4417** (10%) cd: **17666** (40%)
cd: **7066** (16%) cd: **27824** (63%)
cd: **11041** (25%) Imax cd: **44165** (100%)

LUMINOUS INTENSITY DISTRIBUTION

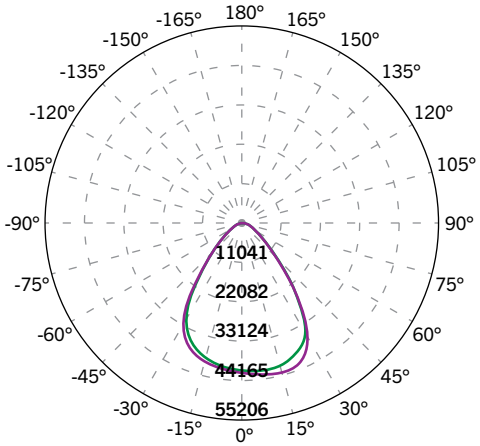

Unit: **cd**

1 Violet C0-C180
2 Green C90-C270

FLUX DISTRIBUTION

Zone	Lumens	% Luminaire
Forward Light	**35,484**	**51.5%**
0°-30°	17,198	25.0%
30°-60°	16,109	23.4%
60°-80°	2,011	2.9%
80°-90°	165	0.2%
Back Light	**33,375**	**48.5%**
0°-30°	16,313	23.7%
30°-60°	14,958	21.7%
60°-80°	1,940	2.8%
80°-90°	165	0.2%
Up Light	**0**	**0.0%**
90°-100°	0	0.0%
100°-180°	0	0.0%

KT-SLFLED500HV-S1-XX-YM-750-VDIM

SPORTS LIGHT FLOOD

EPA SPECIFICATIONS

Small-Size Fixture Housing

Conditions: Horizontal winds only for calculations. Worst case total projected area used for calculations. All drag coefficients are set as worst case 1.2.
For details on exact EPA calculations and assumptions, please contact productsupport@keystonetech.com

EPA Calcs (1.2*ft^2 | View)

Mounting Application	Fixture Position	Housing Size	Single Fixture	2 Fixtures Side-by-Side	3 Fixtures Side-by-Side
Plate Mount	45°	S (500W)	1.77 sq. ft.	3.53 sq. ft.	5.30 sq. ft.

ACCESSORIES

SENSORS

Field-Installable / Field-Use ONLY (purchased separately)

✓	CATALOG NUMBER	DESCRIPTION	COLOR	UPC	EASY CODE
	KT-TLP-HV-3PN	NEMA Type 3-Pin Photocell; 277–480V; 1800VA max	Yellow	843654131832	CGF-01
	TL7-HVG[1]	Synapse NEMA Type 7-Pin 0-10V Controller with Built-in Photocell, Power Monitoring, and GPS; 120-480V	Black	TBD	TBD

[1]Synapse controllers require gateway and mandatory commissioning service charge. Please contact Keystone for further details

277-480V Photocell
KT-TLP-HV-3PN

Synapse Controller
TL7-HVG

CORD SETS

Field-Installable / Field-Use ONLY (purchased separately)

✓	CATALOG NUMBER	DESCRIPTION	UPC	EASY CODE
	KT-SLFLED-EC-35	35′ extension cord to remote mount LED driver for SLFLED fixtures	843654154992	OKK-79
	KT-SLFLED-EC-65	65′ extension cord to remote mount LED driver for SLFLED fixtures	843654155005	QCB-67

35′ Extension Cord
KT-SLFLED-EC-35

MOUNTS AND BRACKETS

Field-Installable / Field-Use ONLY (purchased separately)

✓	CATALOG NUMBER	DESCRIPTION	UPC	EASY CODE
	KT-SLFLED-KM-1-KIT	Knuckle mount kit for Series 1 Sports Light Flood, Small Housing. Gray	843654155821	BHT-47
	KT-SLFLED-SF-S1-KIT	Slipfitter mount kit for Series 1 Sports Light Flood, Small Housing. Fits 2 3/8" tenon. Gray	843654154930	JWV-40

Knuckle Mount Kit
KT-SLFLED-KM-1-KIT

Slipfitter Mount Kit
KT-SLFLED-SF-S1-KIT

Note: Each above item has a corresponding specification sheet with technical drawings. Please visit ***keystonetech.com*** *for details*

(*Accessories* continued on next page)

KT-SLFLED500HV-S1-XX-YM-750-VDIM

SPORTS LIGHT FLOOD

GLARE SHIELD

Field-Installable / Field-Use ONLY (purchased separately)

✓	CATALOG NUMBER	DESCRIPTION	UPC	EASY CODE
	KT-SLFLED-GS-S1-KIT	Glare Shield Kit | Gray | Used on 500W Series 1 Sports Light Flood	843654170527	CCN-71
	KT-SLFLED-GS-360-S1-KIT	360° Glare Shield Kit | Gray | Used on 500W Series 1 Sports Light Flood	843654170084	QXI-03

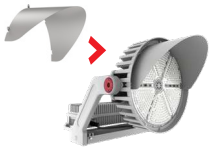

Glare Shield Kit
KT-SLFLED-GS-S1-KIT

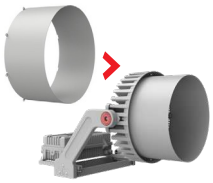

360 Glare Shield Kit
KT-SLFLED-GS-360-S1-KIT

Field-Installable / Field-Use ONLY (purchased separately)

✓	CATALOG NUMBER	DESCRIPTION	UPC	EASY CODE
	KT-SLFLED-LASER-G	Green laser pointer for Sports Light Flood aiming. Includes hardware to mount to SLFLED fixtures	843654155012	ESD-34

Green Laser Pointer
KT-SLFLED-LASER-G

*Note: Each above item has a corresponding specification sheet with technical drawings. Please visit **keystonetech.com** for details*

ORDERING INFORMATION

CATALOG NUMBER	UPC	EASY CODE
KT-SLFLED500HV-S1-20-YM-750-VDIM	843654155302	HQT-17
KT-SLFLED500HV-S1-30-YM-750-VDIM	843654154916	OET-49
KT-SLFLED500HV-S1-40-YM-750-VDIM	843654155319	HHO-04
KT-SLFLED500HV-S1-60-YM-750-VDIM	843654159874	TYZ-10
KT-SLFLED500HV-S1-80-YM-750-VDIM	843654159881	UMY-24

CATALOG NUMBER BREAKDOWN

KT-SLFLED500HV-S1-XX-YM-750-VDIM

1 2 3 4 5 6 7 8 9 10 11 12

1 Keystone Technologies
2 Fixture Type
3 LED Lamp
4 Wattage
5 High Voltage
6 Size
7 Style
8 Beam Angle
9 Mounting Options
10 CRI
11 CCT
12 Dimming

2 Fixture Type

SLF	Sports Light Flood

9 Mounting Options

YM	Yoke Mount

11 CCT

50	5000K

6 Size

S	Small

10 CRI

7	> 70

12 Dimming

VDIM	0–10V

8 Beam Angle

20	20°
30	30°
40	40°
60	60°
80	80°